Bevel Protractor

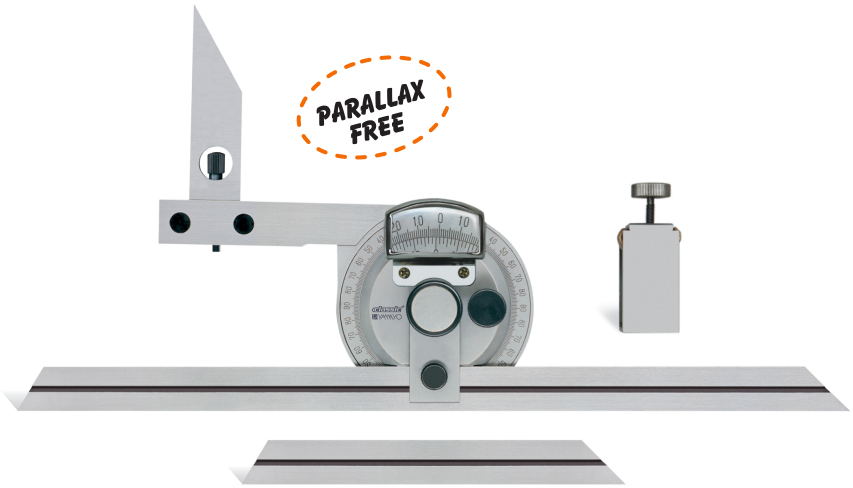

FEATURES

- For use as a reference for assembling and machining.
- Provided with magnifying glass for easy readings.

SPECIFICATIONS & DIMENSIONS

(mm)
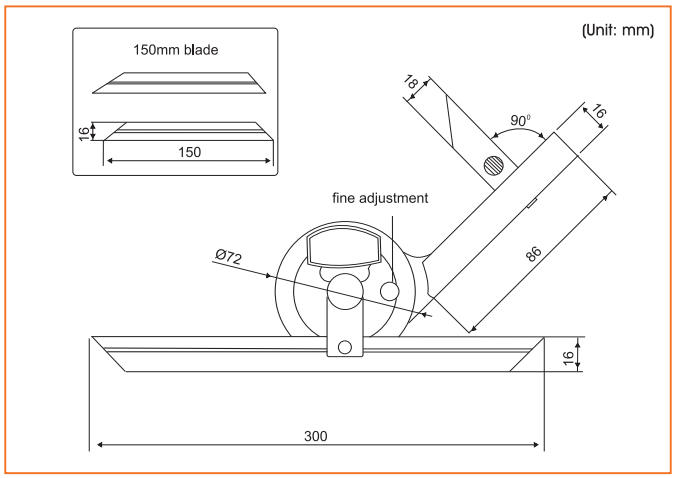
Order No.	Range	Graduation	Accuracy (±)
511-360	0-360°	5'	5'