Interchangeable Outside Micrometers

Type 1

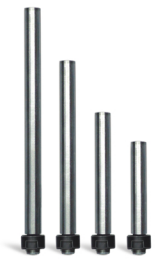

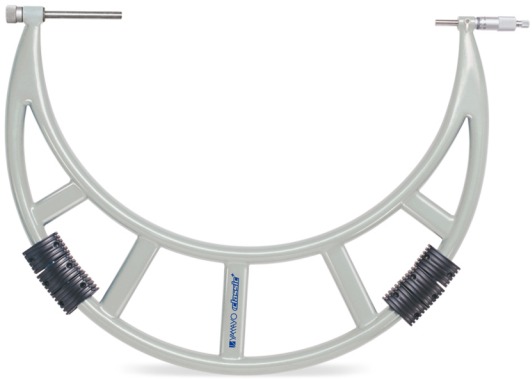

Type 2

FEATURES

- Wide measuring range with interchangeable anvils.
- Satin chrome scale.
- Durable frame with insulated grips.
- Carbide tipped measuring faces.
- Provided with Ratchet stop for constant force.
- Supplied with setting standards for each range.

SPECIFICATIONS & DIMENSIONS

METRIC

(mm)

Order No.	Range	Graduation	Type	Accuracy (±)	a	L
311-050	0-50mm	0.01mm	1	4μm	35	58
311-100	0-100mm	0.01mm	1	5μm	57	108
311-150	0-150mm	0.01mm	1	6μm	82	158
311-151	50-150mm	0.01mm	1	6μm	82	158
311-200	100-200mm	0.01mm	1	7μm	114	208
311-300	150-300mm	0.01mm	1	9μm	165	308
311-301	200-300mm	0.01mm	1	9μm	165	308

Order No.	Range	Graduation	Type	Accuracy (±)	a	L
311-400	300-400mm	0.01mm	2	11μm	224	409
311-500	400-500mm	0.01mm	2	13μm	275	509
311-600	500-600mm	0.01mm	2	14μm	321	609
311-700	600-700mm	0.01mm	2	16μm	371	709
311-800	700-800mm	0.01mm	2	18μm	426	809
311-900	800-900mm	0.01mm	2	20μm	476	909
311-1000	900-1000mm	0.01mm	2	22μm	576	1009

(inch)

Order No.	Range	Graduation	Type	Accuracy (±)	a	L
311-002	0-2"	0.0001"	1	0.00015"	35	58
311-004	0-4"	0.0001"	1	0.0002"	57	108
311-006	0-6"	0.0001"	1	0.00024"	82	158
311-048	4-8"	0.0001"	1	0.00028"	114	208
311-612	6-12"	0.0001"	1	0.00035"	165	308

(Unit: mm)

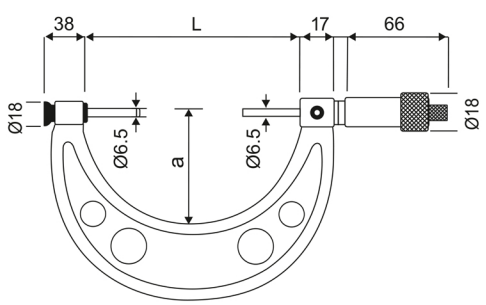

Type 1

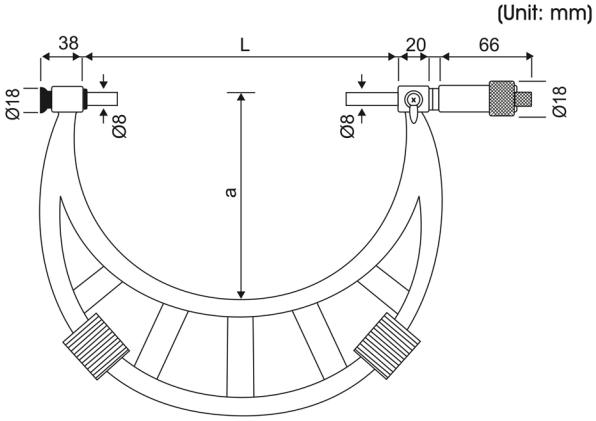

Type 2